NC1175T 400

3/8” RECESSED MINI CONTACT WITH NdFeB 0.400” DONUT MAGNET

DESCRIPTION

Nascom’s NC1175T 400 Series, mini 3/8” recessed screw terminal contact, protects all nonferrous (e.g. wood, aluminum and vinyl) doors and windows, in both residential and commercial settings.

The NC1175T 400 is the installer’s choice of contact configuration where drill depth is critical and excellent air and side-to-side gap are required to prevent false alarms caused by shifting or warping doors and windows.

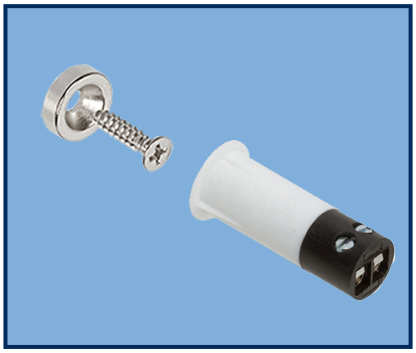

FEATURES

- PRESS FIT SWITCH - NO GLUE REQUIRED
- WIDE GAP - N35 NdFeB RARE EARTH MAGNET
- LISTED TO UL634 STANDARD
- ENCAPSULATED HERMETICALLY SEALED CONTACTS
- POLYPROPYLENE HOUSINGS

ORDERING INFORMATION

PART NUMBER	COLOR	OPERATE GAP (in inches)	CONTACT RATING (Max DC/Peak AC Resistive)				STATIC CONTACT RESISTANCE (50mV, 100mA)
			SWITCHING		CARRY		
			V	I	V	I	
CLOSED LOOP, NORMALLY OPEN, 1FA, SWITCH/MAGNET SET:							
NC1175T400B/ST NC1175T400G/ST NC1175T400W/ST	BROWN GREY WHIITE	0.40 to 0.75	200 VDC	0.5 Amps	10vA	1.5 Amps	150 mOhms
HIGH SECURITY, NORMALLY OPEN, 1FA, SWITCH/MAGNET SET:							
NC1175T400B/STHS NC1175T400G/STHS NC1175T400W/STHS	BROWN GREY WHIITE	0.1875 to 0.50	300 VDC	0.20 Amps	3vA	0.5 Amps	150 mOhms initial

WIRING SCHEMATIC

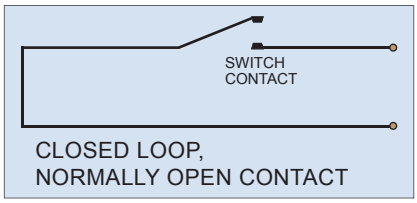

CLOSED LOOP,
NORMALLY OPEN CONTACT

DIMENSIONS - IN [mm]

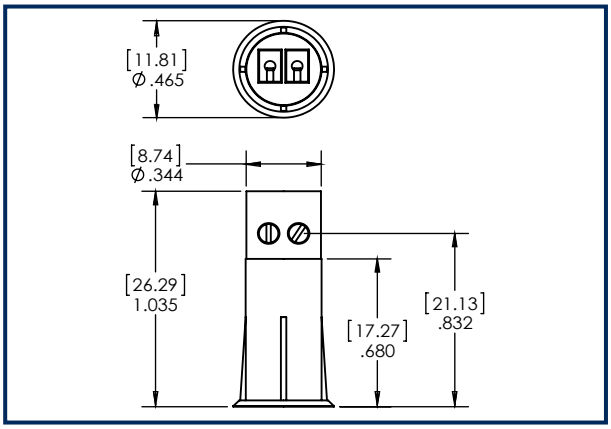

SWITCH

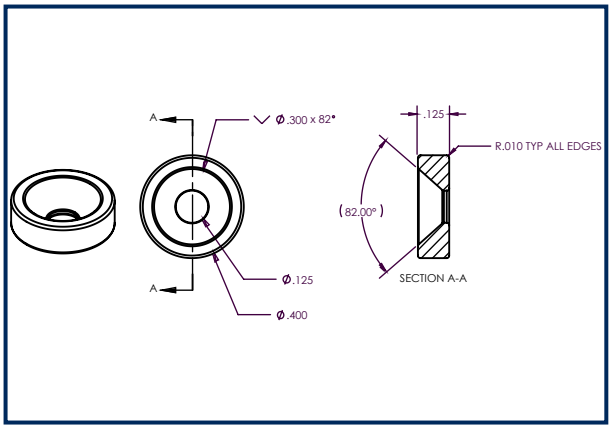

MAGNET

INSTALLATION INSTRUCTIONS

- Mark the desired location for the switch and magnet on the top edge of the door and door frame making sure your marks are in alignment.
- Using a square, transfer the marks on to the top edge of the door and the opposing door frame.
- Using a tape measure or graduations on the square, locate the center of the door edge and place an intersecting line with the first mark. Mount the donut magnet using the #4X1/2 flathead screw provided.
- Repeat the above step to locate the hole position for the switch in the door frame. Drill a 3/8” hole in the door frame.
- Connect wire leads to screw terminal.
- Insert wire leads into hole followed by the switch and press the switch into the hole until the head is flush with the door frame.
- Test system for correct operation.

PART NUMBERING SYSTEM

