DESCRIPTION

Nascom’s N1175 Series, mini 3/8” recessed contact, protects all nonferrous (e.g. wood, aluminum and vinyl) doors and windows, in both residential and commercial settings.

The N1175 is the installer’s choice of contact configuration where drill depth is critical and excellent air and side-to-side gap are required to prevent false alarms caused by shifting or warping doors and windows.

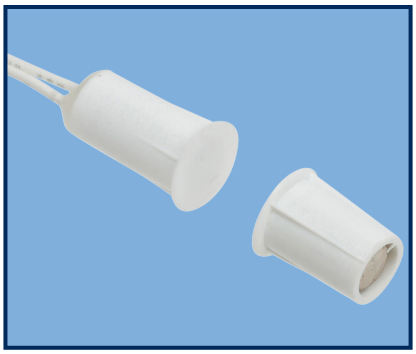

FEATURES

- PRESS FIT - NO GLUE REQUIRED
- 12” 22AWG WIRE LEADS
- WIDE GAP - N35 NdFeB RARE EARTH MAGNET
- ENCAPSULATED HERMETICALLY SEALED CONTACTS
- POLYPROPYLENE HOUSINGS
- LISTED TO UL634 STANDARD

ORDERING INFORMATION

PART NUMBER	COLOR	OPERATE GAP (in inches)	CONTACT RATING (Max DC/Peak AC Resistive)				STATIC CONTACT RESISTANCE (50mV, 100mA)
			SWITCHING		CARRY		
			V	I	V	I	
CLOSED LOOP, NORMALLY OPEN, 1FA, SWITCH/MAGNET SET:							
N1175B/ST N1175G/ST N1175W/ST N1175BLK/ST	BROWN GREY WHITE BLACK	up to 0.875	200 VDC	0.5 Amps	10vA	1.5 Amps	150 mOhms
HIGH SECURITY, NORMALLY OPEN, 1FA, SWITCH/MAGNET SET:							
N1175B/STHS N1175G/STHS N1175W/STHS N1175BLK/STHS	BROWN GREY WHITE BLACK	up to 0.50	300 VDC	0.20	3vA	0.5 Amps	150 mOhms

DIMENSIONS - IN [mm]

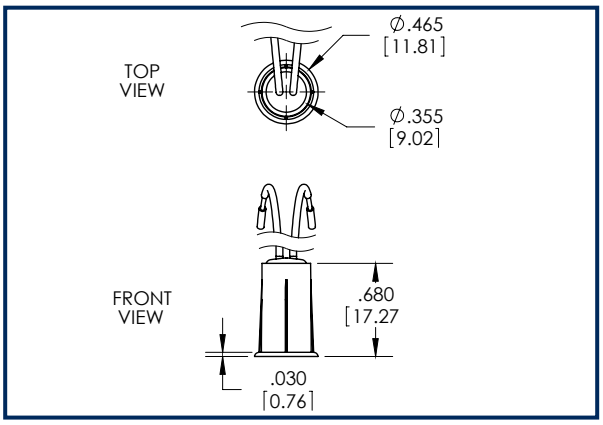

SWITCH

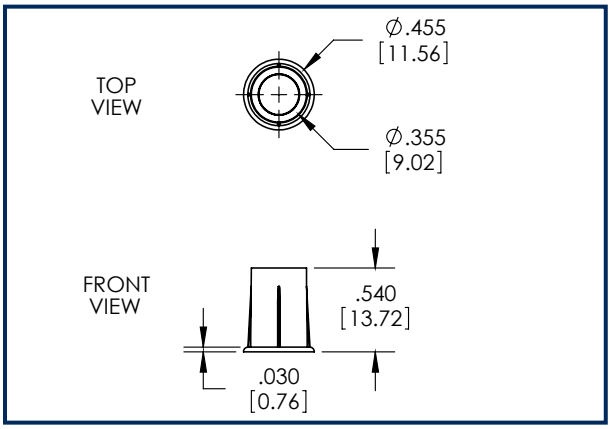

MAGNET

INSTALLATION INSTRUCTIONS

- Mark location for the switch on the door frame and mark the location for the magnet on the top edge of the door.
- Make sure switch and magnet hole locations are aligned.
- Using a square, transfer the marks on to the top edge of the door and the opposing door frame.
- Using a tape measure or graduations on the square, locate the center of the door edge and place an intersecting line with the first mark. Drill a 3/8” hole at the location where the marks intersect.
- Repeat the above step to locate the hole position for the switch in the door frame. Drill a 3/8” hole in the door frame.
- Press the magnet into the hole you drilled in the door until flush with top edge of door.
- Connect the switch leads to the alarm system. **Caution! Hold wire leads, not the switch housing while cutting and stripping to prevent damage to switch.**
- Insert wire leads into hole followed by the switch and press the switch into the hole until the head is flush with the door frame
- Test switch for correct operation and make sure gap performance is acceptable.

PART NUMBER SYSTEM

N1175 X / XX XXX XXXX XX XXX X XX

COLOR:
- W = WHITE
- B = BROWN
- G = GREY
- T = TAN

PRODUCT TYPE (1 or 2 digits):
- ST = SWITCH/MAGNET SET
- SW = SWITCH ONLY
- M = MAGNET ONLY

CIRCUIT (0, 2 or 3 digits):
- Blank = CLOSED LOOP
- 2CR = DUAL CLOSED LOOP
- FB = OPEN LOOP
- SD = SPDT
- DD = DPDT
- HS = HIGH SECURITY

LEAD LENGTH (zero, 3 or 4 digits):
- Blank - 12 Inches
- All other lengths specified in Inches with 3 digits (e.g. 036 = 36 Inches)

END OF LINE RESISTOR (zero to 4 digits):
- Blank = Resistor in series with the switch
- P = Resistor in parallel with the switch
- SP = Resistor 1 in series to the switch; resistor 2 in parallel to the switch

BUILT-IN END OF LINE RESISTOR VALUE (zero to 4 digits):
- Blank = No built-in end of line resistor
- All other resistor values are specified (e.g. 1K = 1,000 Ω)

LEAD WIRE COLOR (zero to 2 digits):
- Blank = Switch Color except:
  - » resistor contacts standard is red wire
  - » all 2 conductor jacketed wire is grey
- BL = Blue leads
- OL = Orange leads

WIRE TYPE (0 or 1 digit):
- Blank = UL1061 | 22AWG | 7/30
- Z = Zipcord ZIP NEC (UL) TYPE CL2
- J = 2-conductor PVC Jacketed NEC Type CL2 and CM