N115 1175

1/4 INCH RECESSED WIDE GAP STUBBY PRESS FIT SWITCH SET - FLANGED

DESCRIPTION

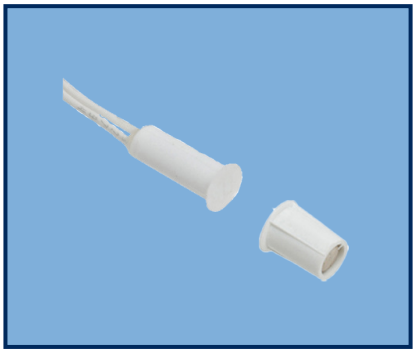

The N115 1175 is a ¼ inch diameter flanged recessed press fit wide gap switch set with a ⅜ inch press fit mini stubby earth magnet. The N115 1175 is designed for narrow applications where drilling space is limited.

The N115 1175 is the installer's choice of contact configuration where drill depth is a consideration and excellent air and side-to-side gaps are required to stop false alarms, caused by shifting or warping doors and windows.

FEATURES

- Slim design
- Encapsulated hermitically sealed contacts
- Press-fit flanged no glue required
- Wide gap - N35 NdFeB rare earth magnet
- Reduced false alarms
- Polypropylene housing
- 12 inch 22 AWG wire leads
- Listed to UL634 standard

ORDERING INFORMATION

PART NUMBER	COLOR	OPERATE GAP (in inches)	CONTACT RATING (Max DC/Peak AC Resistive)				STATIC CONTACT RESISTANCE (50mV, 100mA)
			SWITCHING		CARRY		
			V	I	V	I	
CLOSED LOOP, NORMALLY OPEN, 1FA, SWITCH/MAGNET SET:							
N1151175B/ST N1151175G/ST N1151175W/ST	BROWN GREY WHITE	up to 1.25	200 VDC	0.5 Amps	10vA	1.5 Amps	150 mOhms
OPEN LOOP, NORMALLY CLOSED, 1FB, SWITCH/MAGNET SET:							
N1151175B/STFB N1151175G/STFB N1151175W/STFB	BROWN GREY WHITE	up to 1.25	30 VDC	0.2 Amps	3vA	0.5 Amps	150 mOhms

WIRING SCHEMATIC

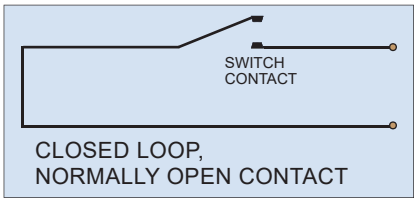

CLOSED LOOP,
NORMALLY OPEN CONTACT

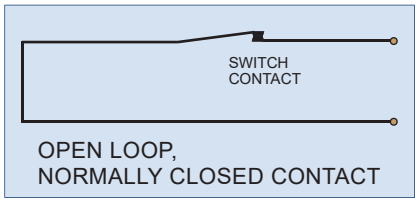

OPEN LOOP,
NORMALLY CLOSED CONTACT

DIMENSIONS - IN [mm]

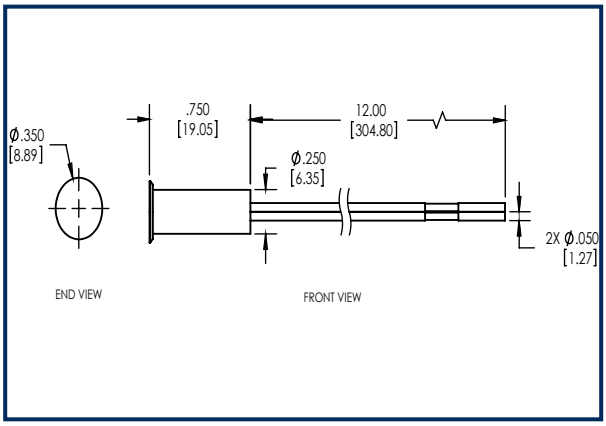

SWITCH

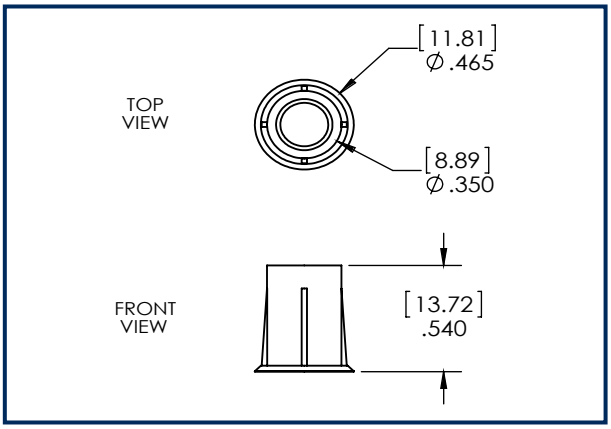

MAGNET

INSTALLATION INSTRUCTIONS

- Mark the desired location for the switch and magnet on the top edge of the door and door frame making sure your marks are in alignment.
- Using a square, transfer the marks on to the top edge of the door and the opposing door frame.
- Using a tape measure or graduations on the square, locate the center of the door edge and place an intersecting line with the first mark. Drill a ⅜ inch hole at the location where the marks intersect.
- Repeat the above step to locate the hole position for the switch in the door frame. Drill a ¼" hole in the door frame.
- Apply adhesive or RTV to the end of the magnet and press the magnet into the hole you drilled in the door until flush with top edge of door.
- Connect the switch leads to the alarm system. **Caution!** Hold wire leads, not the switch housing while cutting and stripping to prevent damage to switch.
- Insert wire leads into hole followed by the switch and press the switch into the hole until the head is flush with the door frame.
- Test system for correct operation.

PART NUMBER SYSTEM

